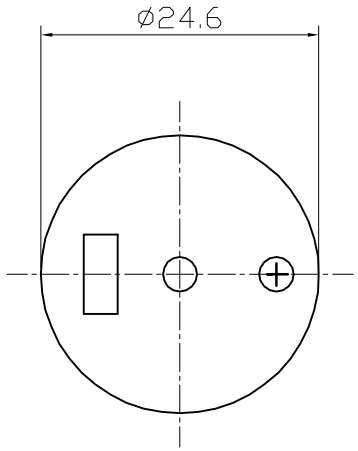


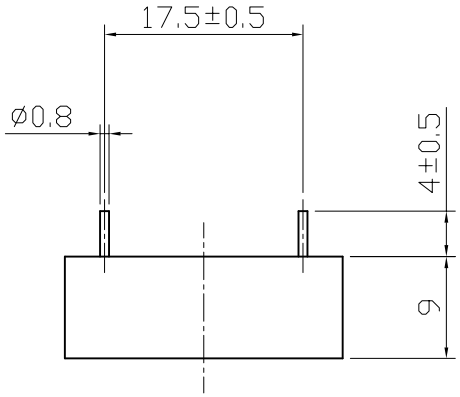


# SPECIFICATION

1.Rated Voltage .....12VDC
2.Operating Voltage .....3~30VDC
3.Max.Rated Current .....12mA at 12VDC
4.Resonant Frequency .....3.6±0.5KHz
5.Min.Sound Pressure Level.....75dB at 12VDC/30cm
6.Tone Nature .....Continuous
7.Case Material .....PC
8.Operating Temperature .....-20～+80℃
9.Store Temperature .....-30～+100℃
10.Weight .....6g

| No. | DESCRIPTION | APPROVED | DATE |
|---|---|---|---|
| | | | |
| | | | |
| | | | |

TOLERANCES UNLESS NOTED OTHERWISE
.X ±
.XX ±
.XXX ±
90° FORMED ANGLES +2° -1°
FIRST ANGLE PROJECTION

| APPROVALS | DATE |
|---|---|
| DRAWN | |
| CHECKED | |
| APPROVED | 05.05.09 |

KEPO NINGBO KEPO ELECTRONIC CO.,LTD
http://www.chinaacoustic.com

Piezo Buzzer
KPI-2510

UNIT mm | DWG NO. KP3.840.012
SCALE NOT TO SCALE | SHEET | VER 1.0